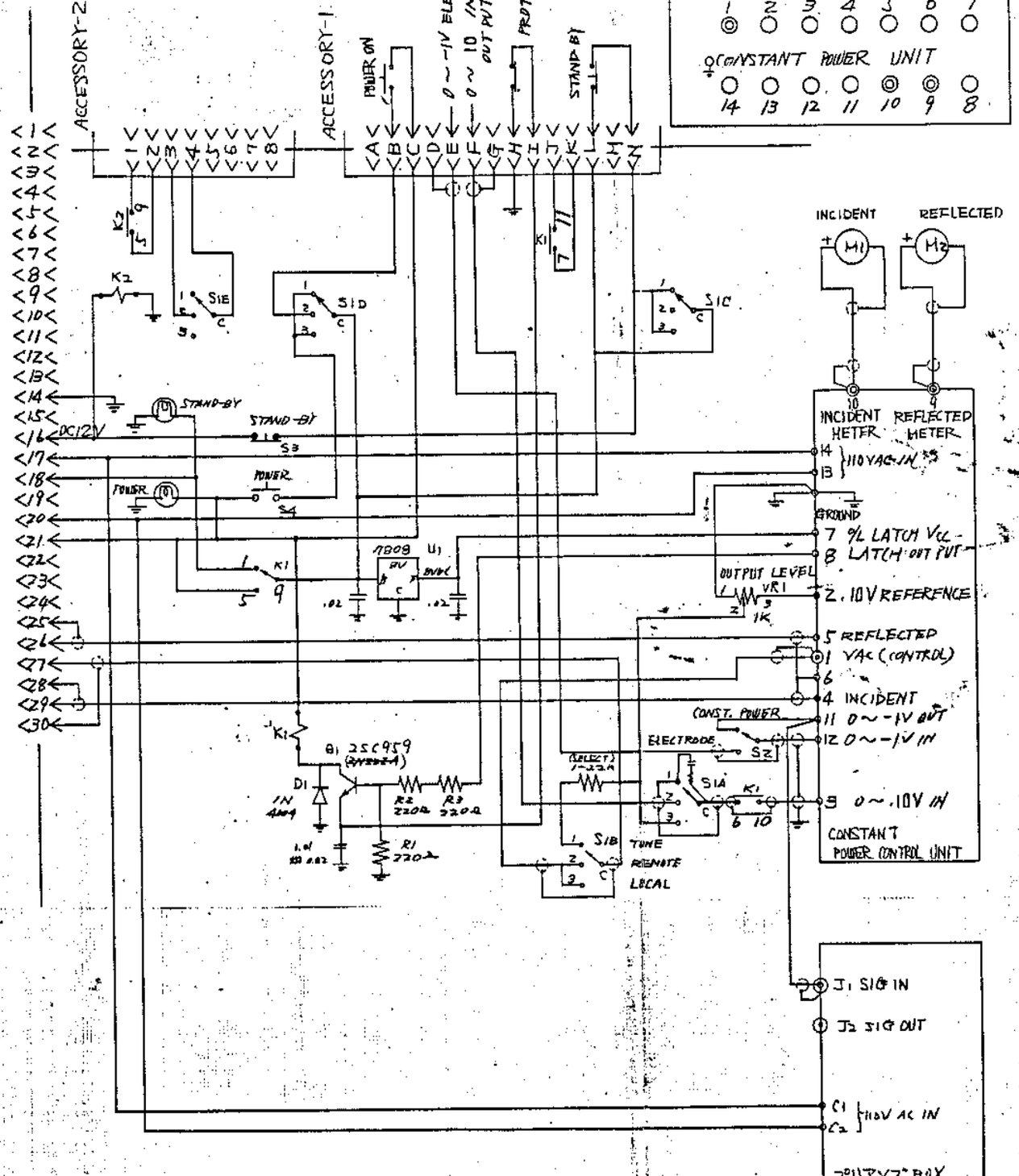
ACCESSORY-2
ACCESSORY-1
POWER ON
0 ~ -1V ELECTRODE
0 ~ 10 INPUT
OUTPUT
PROTECT
STAND BY
CONSTANT POWER UNIT
INCIDENT
REFLECTED
INCIDENT METER
REFLECTED METER
110VAC IN
GROUND
% LATCH VCC
LATCH OUTPUT
OUTPUT LEVEL
VR1
1K
10V REFERENCE
REFLECTED
VAC (CONTROL)
INCIDENT
CONST. POWER
0 ~ -1V OUT
0 ~ -1V IN
ELECTRODE
0 ~ 10V IN
CONSTANT POWER CONTROL UNIT
TUNE
REMOTE
LOCAL
STAND-BY
POWER
DC12V
7809
U1
Q1 2SC959
D1 1N4004
R1 220Ω
R2 220Ω
R3 220Ω
J1 SIG IN
J2 SIG OUT
110V AC IN